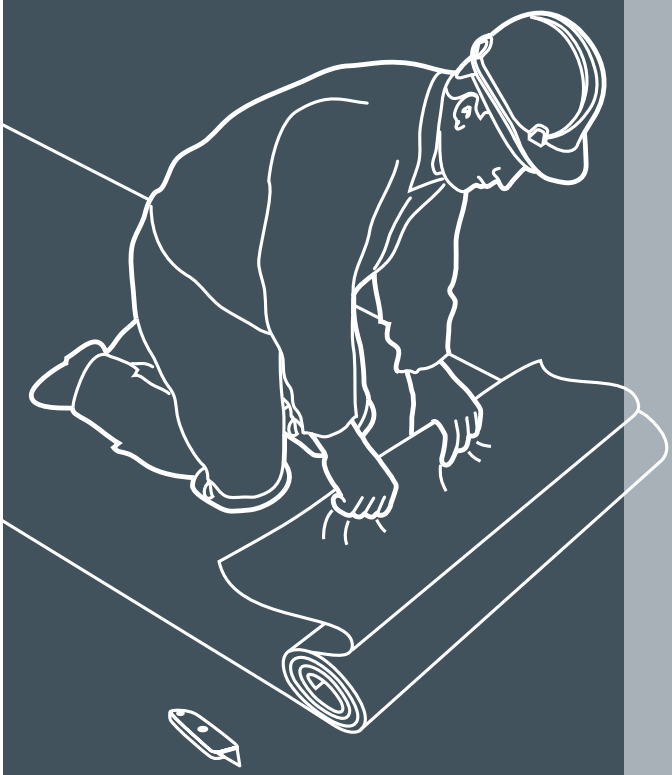

Coldseal

High Performance Self Adhesive Roofing System

Quicktrim

Rapid Roof Edge System

A step-by-step-guide

A guide to the use of the Coldseal Self-Adhesive Roofing System and Quicktrim Roof Edge System on new and existing flat roofs.
Also contains traditional edge detailing guidelines.

BBA BRITISH BOARD OF AGRÉMENT
CERTIFICATE No. 02/3916

RUBEROID

Coldseal and Quicktrim
self-adhesive roofing system

The Coldseal system has been developed to make flat roofing more straight-forward and economical for the jobbing builder, small roofer or experienced DIYer, to a professional quality standard.

There is no need to use hot bitumen, gas torches or large amounts of messy liquids, and only basic skills and tools are required. Tough and durable, the Coldseal system is designed to be clean to handle and, in conjunction with the revolutionary Quicktrim Roof Edge System, simple to install.

Coldseal is a two layer, high performance, self-adhesive system that is ideal for replacing an existing roof covering or installing a new waterproof surface on a properly prepared deck on many types of roof including garages, dormer windows, porches and extensions to habitable buildings.

N.B. This system is not suitable for overlaying existing roof membranes.

Tools required

- A tape measure
- Stanley knife complete with a straight edged blade and hooked blade
- Claw hammer
- 3" or 4" wide paintbrush
- Soft headed broom or cloth
- Flat blade spreader
- Cartridge (skeleton) gun
- Wood saw

Additional items for Quicktrim

- Drill and bit (2 mm diameter)
- Silicone sealant
- Fine sand paper

Fig. 1 **Typical Coldseal specification**

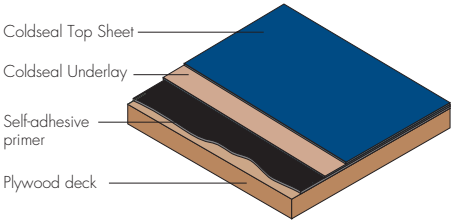

Fig. 2 **Quicktrim Check Kerb**

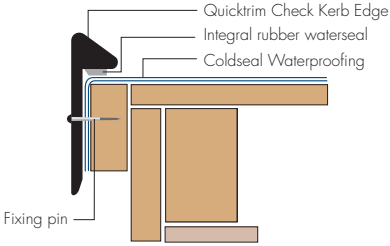

Fig. 3 **Quicktrim Drip Edge**

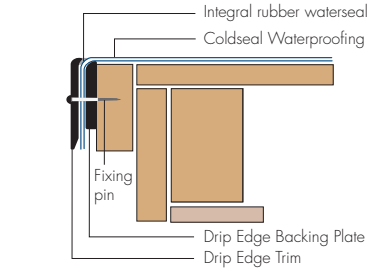

Fig. 4 **Flat roof area calculation**

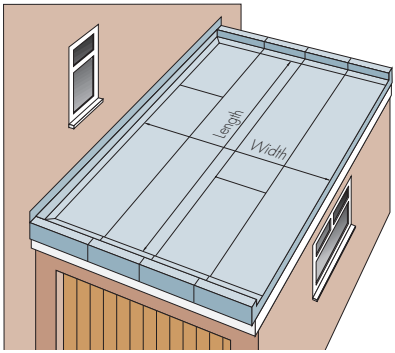

Materials required

Material quantities

The amount of materials required for any flat roof will depend on how simple or complex the roof construction is; the number of changes of surface level, water run-offs, curves, flashings, and gutters there are determine the amount of material required. The following gives a rough guide to calculate the basic requirements. The Coldseal system is made up of four elements and materials can be calculated as follows.

Coldseal Underlay and Coldseal Top Sheet

Underlay is supplied in 8 m x 1 m rolls and Top Sheet in 6 m x 1 m rolls. Calculate the flat area of your roof in square metres (see Fig. 4, length x width). Add 10% for laps and wastage. Add to this the total linear metreage of the upstand detail (the abutment with main house, if applicable) of your roof multiplied by 0.3 m. Where there are larger upstand details such as parapet walls the multiplier of 0.3 m will not be adequate; additional material will have to be allowed for. Divide total square metres by eight for Underlay and six for Top Sheet to give you the number of rolls you need.

Here is a helpful formula:

Flat roof area (length x width)	=	m^2
10% for laps etc. (area m^2 x 0.1 m)	=	m^2
Roof upstand x 0.3 m*	=	m^2
Total	**=**	**m^2**
Divide by 8 for Underlay	=	rolls required
Divide by 6 for Top Sheet	=	rolls required

*When using traditional detailing add sufficient material to cover the open perimeter details (open roof edge x 0.3 m)

Coldseal SA Primer

Supplied in 5 litre tins. One litre should be sufficient for 4-6 m^2 of roof area.

Coldseal Lap Mastic

Supplied in 310 ml cartridges: The cartridge will fit a standard cartridge (skeleton) gun - covers approx. 3 linear metres.

N.B. These coverages are given as a general guide only. Quantities of primer, membrane and mastic may need to increase if roof edges are long and shapes and details are intricate or complex.

Product code	Product name	Size	Base	Surfacing	Description
730400	Coldseal Top Sheet	6 x 1 m	Polyester	Green Slate	Self-adhesive, high performance, green slate surfaced top layer, for use as the Top Sheet in a 2-layer system.
730700	Coldseal Underlay	8 x 1 (m)	Glass fibre	Film	Self-adhesive, high performance, plain surfaced roofing, for use as an underlay in a 2-layer system.
430700	Lap Mastic	310 ml			Cartridge adhesive for sealing end laps and detail work in the Coldseal Top Sheet.
436500	S.A. Primer	5 litres			Surface preparation primer for self-adhesive membranes.

Roof Design and Construction

Building Regulations

It is important to be aware of the existing Building Regulations concerning the design and construction of flat roof structures. In new constructions and some re-roofing projects, it may be necessary to consult your local council Building Control office with regards to compliance with Building Regulations. For information relating to current insulation requirements, refer to Part L1 and L2.

Fig. 5 **Cold roof**

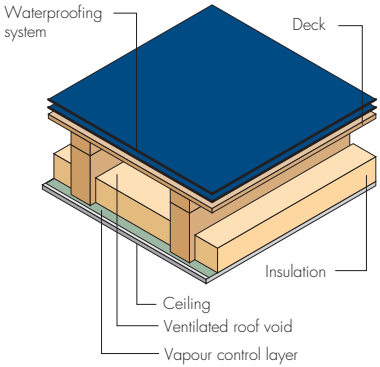

Fig. 6 **Warm roof**

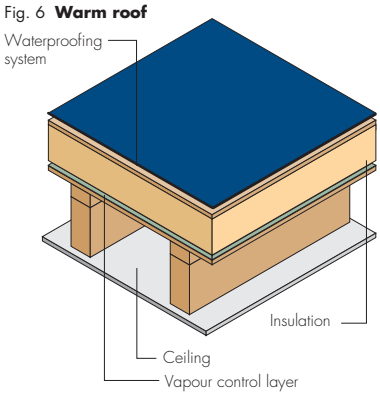

Design considerations

In a flat roof the waterproofing is always supported by a structural roof deck. This is usually a timber boarding of some type which in turn is supported on joists.

With the exception of garages, most roofs above the habitable part of the house require insulation. The most common method is where the insulation is located immediately above the ceiling. This is known as a cold roof (see Fig. 5). In cold weather, the roof could be prone to condensation if adequate through ventilation is not provided. Refer to BS 6229: 1982.

Alternatively, the insulation may be placed above the roof deck. This is known as the warm roof design (see Fig. 6). The insulation used must be of a urethane/plywood composite board with the plywood face on the top surface.

Deck materials

It is important that the right materials are chosen for constructing or strengthening a flat roof deck. Here are some suitable materials.

Plywood Deck

This should be exterior grade type WBP bonded in accordance with BS 6566: Part 8: 1995. A minimum thickness of 18mm is recommended and you should check with your supplier that it is suitable for your particular roof structure.

OSB 3 conditioned decking

Oriented Strand Board (OSB) should be a minimum thickness of 18 mm and be manufactured in accordance with BS EN 300: Part 3: 1992. As with plywood you should check with your supplier that it is suitable for your particular roof structure.

Timber boarding

Where an existing deck comprises of close boarded tongued and grooved timber, it is recommended that a 6mm plywood overlay deck should be installed to provide a smooth homogenous surface for the self-adhesive membrane to bond to.

Concrete

Common in roofs to blocks of flats and some pre-war houses, concrete is a stable and reliable deck material. If this needs repair, provision should be made for drying out before any priming or waterproofing covering is laid.

Chipboard

Although frequently used for residential flat roofs, it is not generally suitable unless the roof has no ceiling, for example, as in a garage. If chipboard is used it should conform to British Standard 5669: Part 2: 1989 Types C.3, C.4 or C.5.

Note: Prebitumenised decks are also suitable.

Essential for a successful flat roof

Like any part of a building's exterior, flat roofs should be constructed to withstand natural and human forces with the minimum of attention.

Protection from rain and snow

- The finished roof should have a slope of at least 1 in 80.
- It is best to drain the roof to one or two edges.
- Conventional eaves gutters are better than internal outlets.
- Internal outlets should be adequately sized to deal with storm conditions and be fitted with clamping rings, leaf and gravel guards.
- The waterproofing should extend up adjacent walls at least 150 mm from the finished roof surface in all situations.
- The top edge of felt should be protected by a cover flashing.

Protection from sun and frost

- It pays to insulate: heating bills are lower and rooms are cooler in the summer.
- Insulation of new flat roofs must satisfy the Building Regulations, Part L1 and L2.

Protection from condensation

- Cold roofs should have adequate through-ventilation in the void space (see Fig. 5).
- All insulated roofs require a vapour control layer.

Protection from the wind

- All roofs should be constructed to resist wind forces.

Protection from people

- If the use is changed, the structure may have to be strengthened.
- Damage is often caused by service trades such as a window cleaner, for example.

Before you begin

Consider the weather

Now you have assembled all the materials, tools and equipment you need, the final consideration before beginning your roofing job is the weather. Try to ensure that the weather will be dry all day and if possible conditions warm.

Temperature awareness

The Coldseal material is easiest to work at a temperature over 10°C. If it is difficult to achieve this temperature whilst working on the roof, it is recommended that the material be stored in a warm environment for 24 hours prior to use.

If it is necessary to work on the roof in cold weather, then the gentle warming of the adhesive side of the felt with an electric hot air paint stripper or similar (not a naked flame) will help the adhesive properties of the material. If temperatures become extreme it is advisable to postpone the project until more favourable temperatures pertain.

Make good and mend

Inspect the condition of the existing roof structure and deck prior to commencement of roofing. Make any structural repairs that are necessary and ensure that the surface area of the roof is free from obstructions, smooth, clean and dry prior to the commencement of the project.

The right sequence

It is advisable to plan the sequence of your roofing job to ensure that you have the right materials at the right time. If in doubt, read these instructions through completely first noting down the sequence in which you will use the materials.

Guard rail warning

For roofs above 2 metres high it is essential that a safety guard rail be erected around the perimeter of the roof. At this height ladders should be fixed to the guard rail and secured at the foot to prevent slipping.

Fig. 7 **Overview**

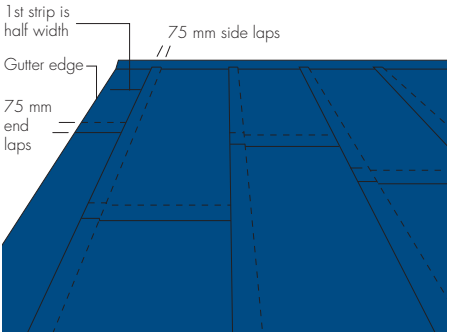

Step 1
Preparation and priming

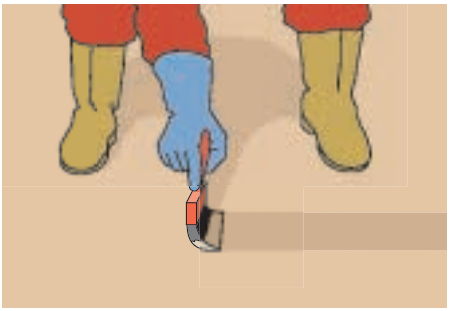

Fig. 8 **Preparation and priming**

For simplicity, these instructions deal with flat roofs for garages and extensions.

New roofs

For new roof structures, first ensure that materials used are suitable for the purpose. Please refer to pages 4 and 5 of this guide for information about suitable materials for roof structures.

Existing roofs

For an existing roof, where the material needs replacing, strip off all old roofing felt and covering, fill knots, large holes and gaps in the timber or other material deck surface. Flatten or cut off any projections that may interrupt or interfere with the smooth line of new roofing material.

Quicktrim preparation

Provide a softwood timber batten 50 mm x 25 mm mechanically fixed to the roof perimeter. The batten should be flush with the surface of the deck. There is no need to install separate timber check kerbs or angle fillets.

Where applicable, cut to length and fix the Drip Edge backing plate to the external face of the batten (flush with the top) with the pins provided, through the pre-drilled holes. Pre-drill any addition fixing holes as required.

Prime surfaces

Prime all deck surfaces to receive the Coldseal membranes using the Coldseal SA Primer. Prime all walls up to and including the chase following the instructions on the Coldseal SA Primer can. (see Fig 8).

Note: The Coldseal SA Primer is not a waterproof coating for flat roofs; it is only preparing the deck surface to receive the Coldseal Underlay. Using other primers may result in incompatibility with the Coldseal Underlay.

Step 2
Applying the underlay

Fig. 9 **Applying the underlay**

Measuring and laying out

The Coldseal Underlay has a non-removable polythene top surface and an adhesive under surface protected by release paper.

Lay out the underlay with the release paper intact and cut the underlay to the size required.

N.B. It is best to use a hooked blade when cutting Coldseal membranes.

The underlay will be laid in strips running parallel with the gutter/drip edge. The first strip of underlay should be cut to half its width along its length. This will allow for staggered joints when applying the Top Sheet. The length of each strip required should provide for covering angle fillets as necessary.

If the length of the roof is longer than an 8 m roll, allowance should be made for overlaps of 75 mm where two ends of roll join (see Fig. 7).

Allowance should be made for roofing material to form the upstands, and to overhang any open edges by 50 mm.

With the correct amount of underlay strips cut, you are ready to apply the self-adhesive underlay to the deck.

Start at the gutter edge

Starting from the lowest point of the roof (the gutter/drip edge) lay out the first felt strip in its correct position on the roof. This first strip of Underlay should be laid to overhang the gutter/drip edge of the decking by 50 mm.

Next, roll half of the strip back towards the centre to expose the release paper underneath.

At a point close to the centre of the strip that has been folded back, carefully cut the release paper across the width of the roll with a Stanley knife using a straight edged blade without cutting through the Underlay.

Peel the paper

- Peel back some of the release paper to expose that part of the underlay which is now ready for sticking to the deck. You will be, therefore, working from the centre of the strip towards a roof side edge. (see Fig 9)
- Gradually peel back a section of the release paper at a time whilst pressing down the self-adhesive side of the Underlay onto the decking, using a rag or soft headed broom to eliminate air bubbles.

- Where two ends of strip need to be joined, overlap the ends by 75mm and ensure that all overlaps face the same direction.
- All joins should be staggered so that no two overlaps appear in the same position on adjacent strips.
- Securely press the Underlay into any angles that are encountered; acute angles can be more easily stuck with pressure from a cloth, soft broom or, if necessary, a wallpaper roller or similar.
- Repeat this procedure for the other half of the membrane.
- Repeat this procedure for each strip or strips, starting at the centre of the strip working to one side and then repeating the process to the other side.
- Each additional strip should overlap each lower strip along its length by 75 mm.

At the edge

- At open roof edges, dress down the vertical face by 50 mm.

Up the wall

- If there is a vertical wall where the highest point of the deck ends, the Underlay will need to go up the wall by 150 mm from the finished roof surface. It is usually easier to do this with separate pieces of membrane cut to the required size.

Cover all areas

Finally, check that all areas of the decking, kerbs and upstands are covered with Underlay and that any trapped air bubbles have been removed to achieve as smooth a surface as possible.

Where there are internal and external corners to be waterproofed, the membrane will need to be cut and positioned according to instructions on pages 16 and 17 as required.

Step 3
Applying Coldseal Top Sheet

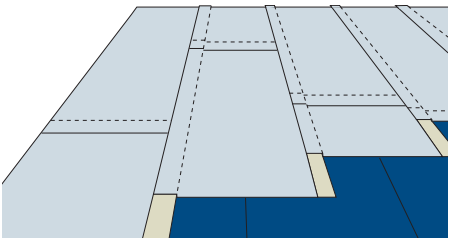

Fig. 10 **Measure and layout**

Fig. 11 **Applying Top Sheet**

Measure and layout

Lay out and cut the Top Sheet strips to size in exactly the same way as the Underlay, allowing a 50 mm overhang and ensuring that end laps and side joints do not coincide with those of the Underlay.

The first Top Sheet should overhang the roof drip edge by approximately 50 mm.

Lay out the Top Sheet with the release paper intact and cut the Top Sheet to the size required. Use the same method of applying as for Underlay. The Top Sheet will be laid in strips running with the joints staggered but not overlapping any underlay joint (see Fig. 10). At open roof edges, dress down the vertical face by 50 mm.

Where two ends of strip need to be joined, overlap the ends by 75 mm and ensure that all overlaps face the same direction. All joins should be staggered so that no two overlaps appear in the same position on adjacent strips.

Securely press the Top Sheet into any angles that are encountered.

Repeat the procedure for all strips of Top Sheet until the deck area is completely covered.

Sealing needed

You will notice that, at end laps and detail work, the underside of the Top Sheet will not adhere very well to the top, green slate mineral coating of the Top Sheet strips now in place. Step 4 shows how to seal these joints, which should be done as you install each piece of Top Sheet. The strip of Top Sheet should be laid out with the selvedge edge to the middle or where the next roll of felt is to come.

As with the Underlay and previously laid Top Sheet, make sure that all the overlaps go in the same direction, that any joins are not over the joins in the Underlay and no two joins are in the same line on different strips of Top Sheet.

Step 4

Sealing Top Sheet at details and end laps

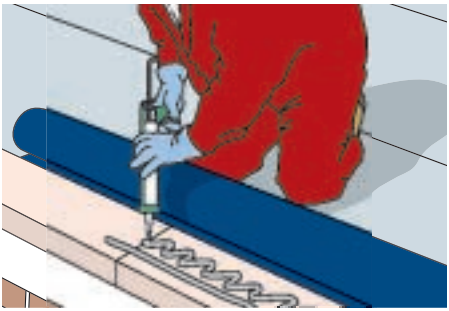

Fig. 12 **Sealing**

To seal the Top Sheet, where it is being applied to a green slate surface, i.e. end laps and upstand details, use Ruberoid Lap Mastic.

Apply Ruberoid Lap Mastic

Apply a generous snaking 5mm bead of Coldseal Lap Mastic to the topside of the lower Top Sheet surface, across a band of 75 mm or so. Using a spreader, spread the mastic evenly over the surface of the Top Sheet. (see Fig 12).

Firmly press the top strip of Top Sheet down onto the Lap Mastic to join the two surfaces together in a watertight bond.

Step 5

Installing Quicktrim Roof Edge System

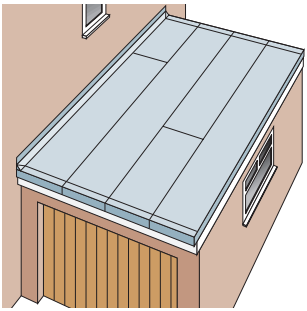

Fig. 13 **Installing Quicktrim**

On the typical flat roof the remaining areas to be finished are the edges and the upstands.

Quicktrim Check Kerb Corner Sections

First apply all the corner sections pressing the top edge down firmly to compress the foam seals on to the waterproof membrane. Holding firmly in position, gently hammer the fixing pins through the pre-drilled slotted holes. Do not over tighten the pins against the trim face.

Quicktrim Drip Edge

Cut the drip edge trim to length allowing a 3 mm expansion gap between sections or corners. Tidy up cut ends with the fine sandpaper. Drill additional slotted fixing holes as required to suit any cut length. Fix the Drip Edge trim over the membrane, firmly pressing down to compress the foam seal on to the waterproof membrane. Holding firmly in position, drill a 2 mm hole through the back trim and gently hammer in the fixing pins. (see Fig 3).

Step 5 Installing Quicktrim Roof Edge System (continued)

When butting lengths of trim together, ensure that a section of foam seal is positioned between the joint. The top edge of the trim should be level or just below the surface of the roof deck waterproofing. Finally, fix the joint clips by applying a bead of silicone to one side of the joint, then hook the clip under the bottom edge of the trim and snap the top edge over the top.

Quicktrim Check Kerb

Cut the Check Kerb to the required lengths allowing a 3 mm expansion gap at all joints. Tidy up cut ends with the fine sandpaper. Press the kerbs down firmly compressing the foam seal on to the membrane surface, then gently hammer the fixing pins through the slotted fixing points. Pre-drill additional slotted fixing holes to suit any cut lengths. When butting lengths of trim together, ensure that a section of foam seal is positioned between the joint.

Finally, fix the joint clips by applying a bead of silicone to one side of the joint, then hook the clip under the bottom edge of the trim and snap the top edge over the top. (see Fig 2).

Upstands

The underlay will already be placed up the adjacent wall to about 150 mm height from the roof surface. The extra strip of Top Sheet should be applied to the wall and brought down onto the slate surface deck to cover the upstanding section. The detailing strip and deck should be bonded together with Coldseal Lap Mastic.

An extra strip of Top Sheet can be used as flashing if required (see Fig. 14).

Note: The slate green surface of the Coldseal Top Sheet is a perfectly adequate waterproof finish. However, stone chippings may also be applied using a chipping compound if required.

Fig. 14

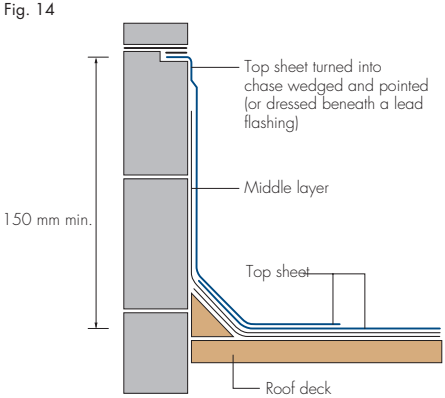

Fig. 15 **Definitions (for traditional detailing)**

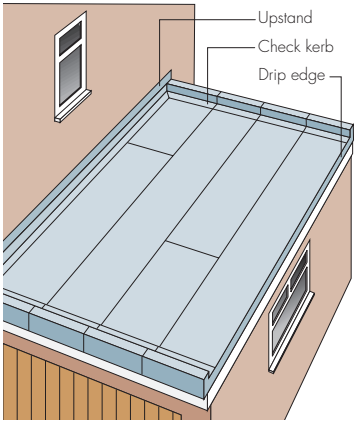

Traditional edge detailing

Check kerbs

Timber kerbs installed along an edge of a roof to prevent water running off that edge and to encourage water to run only towards the gutter/drip edge (see Fig. 15).

Upstands

The point on a roof where the deck meets a vertical surface such as a wall. The internal angle should be filled with an angle fillet. The roofing felt must always be dressed or taken up the vertical surface by at least 150 mm above the roof surface. The membrane is usually fixed into a chase or underneath a flashing (see Fig. 14).

Flashing

A lead, plastic or roofing material strip that has been let into a mortar line or cut into brickwork and sealed to allow the run-off of rainwater from the roof. The lower edge of the flashing strip will overlap the top edge of roofing material to ensure a weathertight seal.

Welted drip/gutter edge

The drip/gutter edge is the point on the roof where water runs off into the gutter. The welted drip is formed out of Coldseal Top Sheet, timber battens and hardboard strips. It is designed to ensure the effective run-off of rainwater without the water running down the wall (see Fig. 17).

Additional materials required for traditional detailing

Galvanised Clout Nails

Clout nails should be 19mm long with extra large heads, and calculated on the basis of twenty one nails per linear metreage run of roof at the kerbs and gutter edges.

Hardboard formers

Width of the hardboard strip should be 75mm.

Angle Fillet

Timber angle fillets can be bought already cut to a triangular section, 75mm x 75mm.

Drip Battens

Lengths of timber Approx, 50mm x 25mm.

Fitting fillets and battens

These are used to provide check kerbs along roof edges that will prevent water run-off and direct water to the drip/gutter edge.

Use 75mm x 50mm timber for battens and 75mm x 75mm triangular section timber for fillets.

Fit angle fillets to all upstands and check kerbs as required.

Fit drip battens, as illustrated previously, along all edges (gutter and check kerbs etc.). The batten should be flush with the top of the fascia board with the 25mm edge uppermost.

Cut hardboard formers

Cut hardboard formers to the length of the gutter/drip edge, and prime with Ruberoid SA Primer.

Traditional edge detailing
The gutter/drip edges

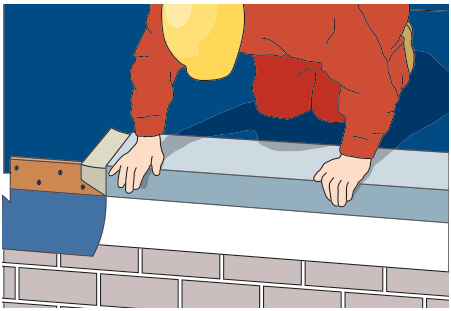

Fig. 16 **Traditional edge detailing**

Measure the gutter edge

N.B. When using traditional detailing, remember to allow for additional quantity of of sheet when purchasing (open perimeter x 0.3 m).

These strips will form the welted drip edge at the lowest point of the roof i.e. where rainwater will be required to run off the roof into a gutter. The width measurement of the Top Sheet strips required will be twice the width of the hardboard former plus a minimum of 150 mm to go back onto the roof. The length of strips is determined by the length of the drip edge with an allowance for overlaps. First, cut sufficient strips to accommodate the length of the roof.

Nail the Top Sheet strips

Next, starting from one end of the roof and working along the drip edge, carefully nail, using clout nails, the first strip of Top Sheet to the drip batten, with the release paper peeled back slightly to expose the self-adhesive underside of the Top Sheet. The top edge of the Top Sheet should be flush with the top of the drip batten and the remainder of the strip is hanging down with the self-adhesive side facing away from the roof and the slate green mineral side facing the building. For the moment leave all release paper in position only peeling back sufficient to expose enough of the self-adhesive side to nail onto the drip batten.

Lapping of welts

With all the strips across the length of the gutter/drip edge in place, hanging down like a curtain off this edge, take the primed hardboard formers and nail them, using the large head clout nails, to the drip batten, so that the Top Sheet strips are sandwiched between the hardboard former and the drip edge batten.

The selvedge edge

Along one edge, on the top (green slate mineral) surface of Coldseal Top Sheet, is a strip of release paper covering a self-adhesive strip. (This selvedge edge is for overlapping and sticking one piece of Top Sheet to another to form a weathertight seal). You should always ensure that the selvedge is on the side where your next piece of Top Sheet is to be applied.

Fold over welts

Remove the remainder of the release paper from the self-adhesive underside of the Top Sheet and draw the Top Sheet up over the hardboard former and onto the roof to stick to the Underlay that is already in place. At the point where these Top Sheet strips meet the kerb areas, the Top Sheet should be cut to avoid creases and folds (see page 15).

Note: The portion of the Top Sheet strip that is on the roof will be covered by a further strip of Top Sheet, detailed in later steps, to form a tough, watertight seal.

Kerb edges

Finishing the kerb edges is the same procedure as making the welted edge on the gutter/drip edge, but the finishing sheet will need to be bonded to the slate green surface with the lap mastic (see Step 4, Fig. 12).

Fig. 17 **Welted drip at eaves or verge**

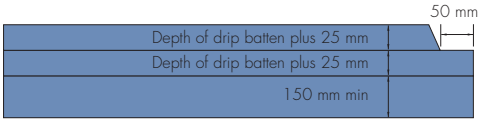

Fig. 18 **Junction of drip edge and check kerb**

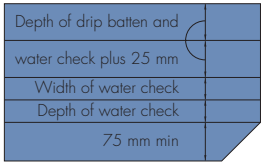

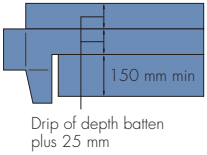

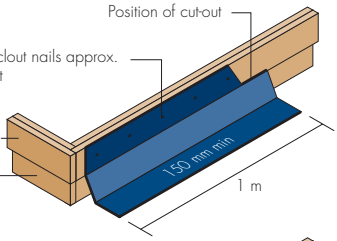

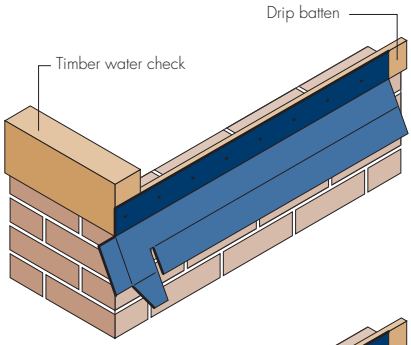

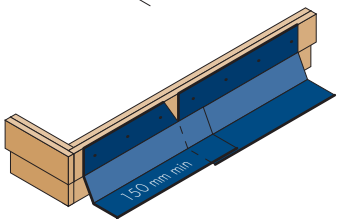

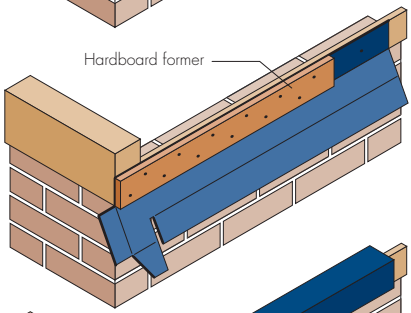

Lapping of welts

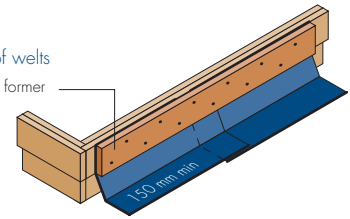

Fold over of
lower welt

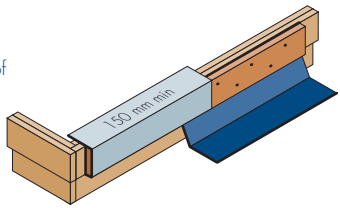

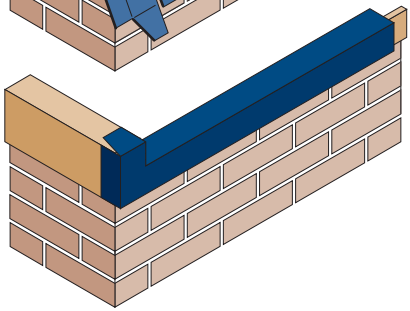

Forming typical external corners

Fig. 19 **Drip detail**

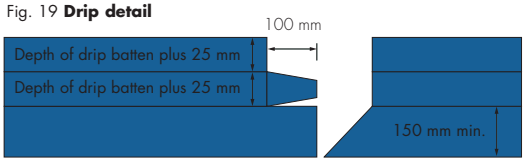

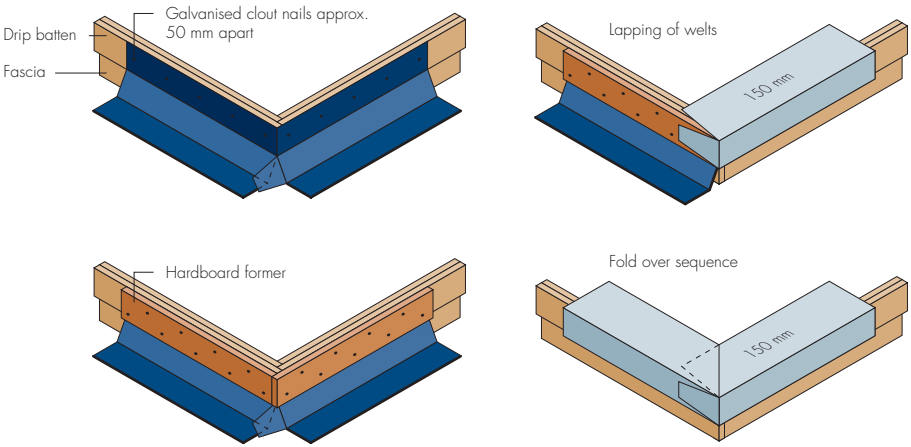

Fig. 20 **Upstand detail**

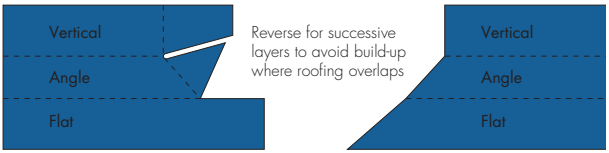

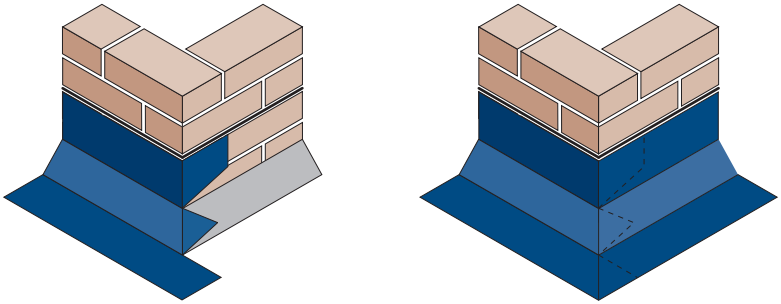

Forming typical internal corners

Fig. 21 **Drip detail**

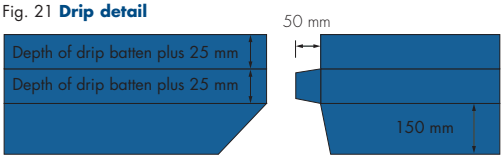

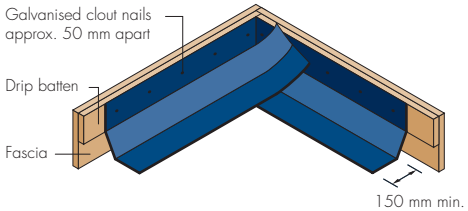

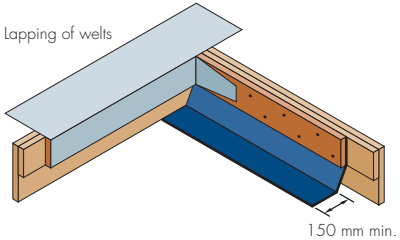

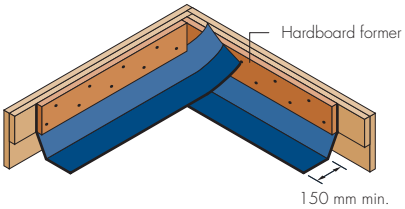

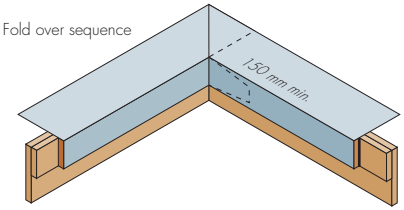

Fig. 22 **Upstand detail**

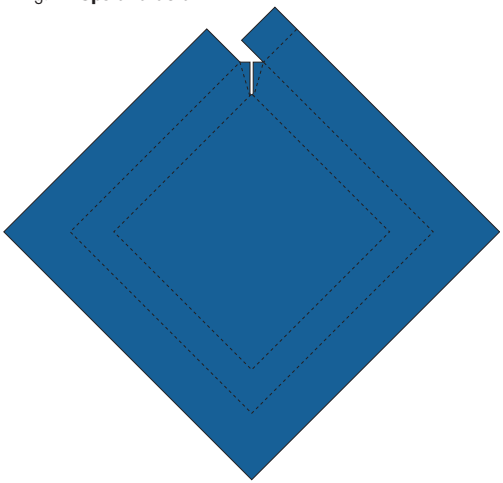

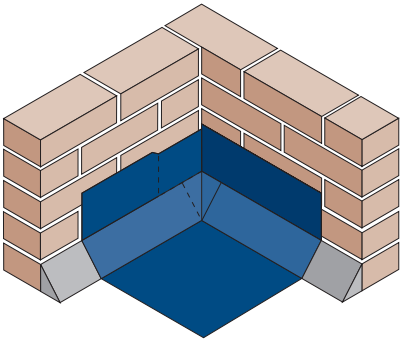

Junction of welted apron and wall upstand

Fig. 23 **Junctions**

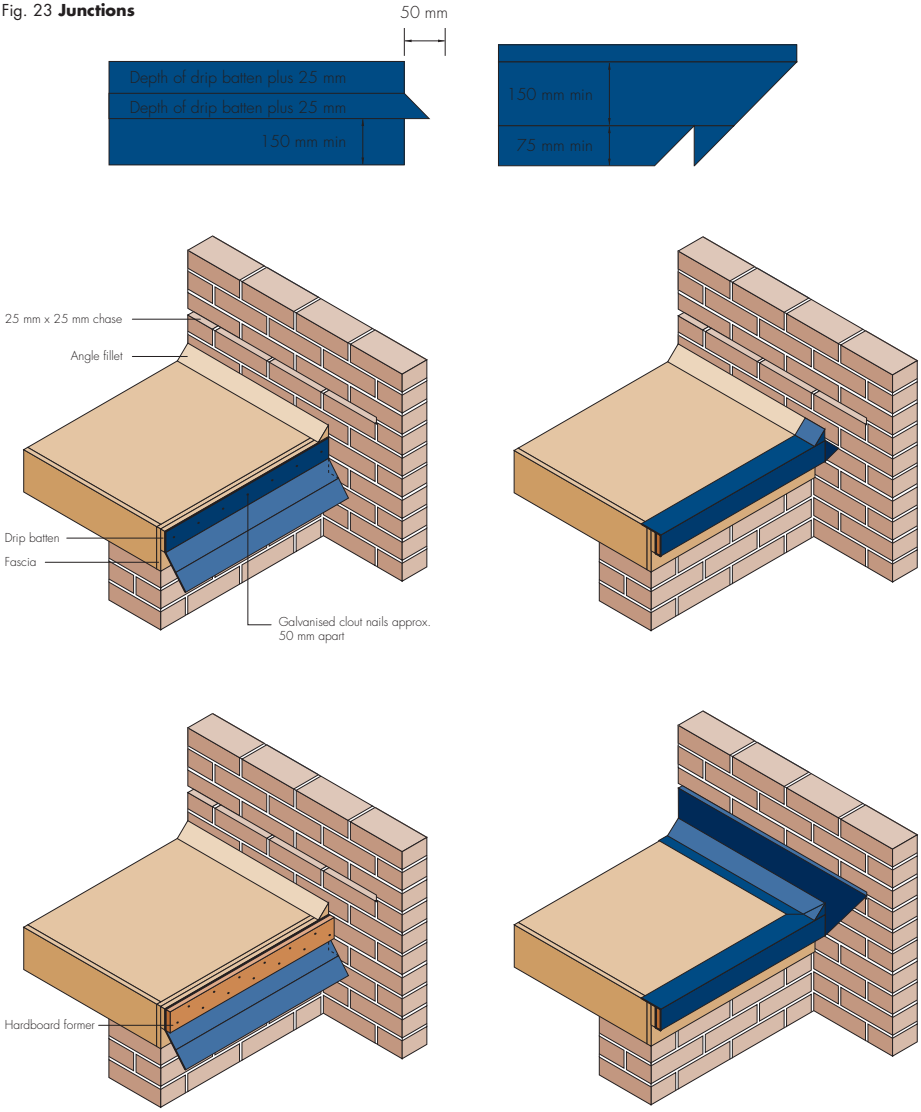

Flat roof maintenance

Ideally all flat roofs should be inspected once every six months, in the Spring and Autumn. These inspections only take a matter of minutes and involve a routine look at the roof condition.

It is important to check the outlets, projections, gutters, rooflights and flashing. If any of the surface chippings have become displaced they should be swept back into position.

In Spring it is important to check that the gutters and outlets are not blocked by fallen leaves which may cause water to pond. This is also the time to look for frost damage to the pointing which may allow the roof structure to become damp.

Welted drip to check kerb

Fig. 24

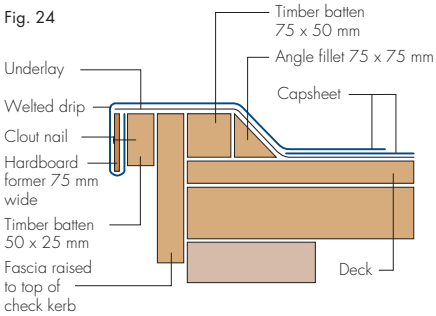

Welted drip to gutter edge

Fig. 25

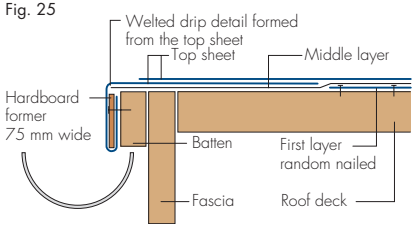

Dos and don'ts

- Do deal with a leak as soon as it is noticed.
- Do check with the original specification to identify the roof build up.
- Do consider repair now rather than costly replacement later.
- Do check the roof before and after any work is carried out by other trades. In this way damage caused by other people will be easily identifiable.
- Don't use the roof as a working platform for adjoining buildings.
- Where access is required, protection must be given so as not to damage the waterproofing membrane.
- Don't allow other trades to fix units through the waterproofing membrane without proper advice. This is especially important when having television aerials, satellite dishes and telephone cables installed.
- Don't drop cement, paint or solvents on the roof as these will damage the surface.

Technical Advice Service

A free technical advice service is available from the Technical Services Department on 01707 822554.

Customer Services

Appley Lane North, Appley Bridge, Wigan, Lancs WN6 9AB
Tel: 0800 028 5573 Fax: 0800 013 5574
Email: sales@ruberoid.co.uk

East Camperdown Street, Dundee DD1 3LG
Tel: 01382 450115 Fax: 01382 451896
Roofing order line: 0800 783 7368
or email: roofingsales@ruberoid.co.uk

Dennison Industrial Estate, Ballyclare, County Antrim BT39 9EB
Tel: 028 9334 2398 Fax: 028 9335 2605
Email: info@ruberoidni.com
www.ruberoid.ie/ni

Unit 3, Carriglea Industrial Estate, Naas Road, Dublin 12, Ireland
Tel: 01 4564435 Fax: 01 4564291
Email: info@ruberoid.ie
www.ruberoid.ie

RUBEROID
Waterproofing your world

IKO
Setting the Standard

Ruberoid Building Products Ltd. Member of the IKO Group
Tewin Road, Welwyn Garden City, Herts AL7 1BP
Tel: 01707 822222 Fax: 01707 375060 Email: rbp-wgc@ruberoid.co.uk www.ruberoid.co.uk